AIRKEWLD INSTALL GUIDE

CHASSIS INSPECTION PLATE

Application: VW Type 1 (Beetle, Ghia, Super, Thing) & Type 3 · All Years · clutch cable & tube access

Quick Reference · Page 3 includes a 1:1 cut template — PRINT AT ACTUAL SIZE.

DOC	AK-CH-001
REV	2.1
DATE	2026-05
PAGE	1 / 3

SPECS AT A GLANCE

CUTOUT
4" wide × 3 1/2" tall
radiused corners

REFERENCE
1/2" up from floor pan
1 1/2" back from firewall

COVER PLATE
5" × 4 1/2"
(1/2" overlap per side)

SCREWS
(4) Phillips · drill motor
KEEP PRESSURE — no impact

TOP 5 INSTALL MISTAKES

01. **Cutting without measuring twice.** Mark all four lines from the chassis references — floor pan and firewall — not from carpet or trim. Lay the rectangle out with a Sharpie before any tool touches metal.
02. **Drilling corners without center-punching.** Step bits walk on smooth steel. Center-punch each corner first — skip this and the radii end up off-center, the rectangle goes crooked, and the cover plate won't sit flush.
03. **Skipping the deburr.** Sharp edges from the cutoff wheel will catch carpet, fingers, and the clutch cable. File or sand every edge AFTER cutting and BEFORE priming.
04. **Stripping screws.** The (4) supplied Phillips screws self-tap into the tunnel. Use a drill MOTOR — not an impact — and KEEP PRESSURE on each screw or you'll cam out and strip the head before it bites.
05. **Welding the clutch tube hot.** The clutch tube is THIN-WALL. If the bracket is loose, tack first then finish-weld in short low-heat passes. Burn through and you've replaced a $5 fix with a $200 cable run.

TOOLS REQUIRED

Measuring tape · Sharpie marker
Center punch + hammer
Step drill bit (corner radii)
Cutoff wheel or air saw
File or sandpaper (deburr)
Drill motor + Phillips bit
Primer · paint brush or rattle can
TIG/MIG welder (if clutch tube loose)

1 ACCESS & MARK

01. Access the tunnel OPPOSITE the pedal assembly. Pull carpet back (or remove) if the car is complete.
02. Mark BOTTOM line: 1/2" up from the floor pan — Sharpie a 6" line.
03. Mark TOP line: 4" up from the floor pan — second Sharpie line parallel to the first (cutout = 3 1/2" tall).
04. Mark FRONT line: 1 1/2" back from the firewall — Sharpie a 5" line.
05. Mark REAR line: 5 1/2" back from the firewall — second Sharpie line (cutout = 4" wide).
06. Verify rectangle visually before drilling — corners square, lines parallel.

PRO TIP

Why this opening exists. *The plate gives direct access to the clutch cable and clutch tube bracket inside the chassis tunnel. After install, you can change a clutch cable or adjust pedal feel WITHOUT removing the pedal assembly — five-minute service instead of an hour. The cover plate keeps the tunnel sealed against road grime when not in use.*

INSTALLATION FLOW

PHASES 2 – 6 · PUNCH & DRILL · CUT & DEBURR · CLUTCH TUBE · MARK & SCREW · PRIME & FINAL

2 PUNCH & DRILL CORNERS

01. Center-punch all four corners exactly where the lines meet. NO punch = step bit walks.
02. Step-drill each corner — these holes ARE the cutout's corner radii.
03. Drill all four corners to the SAME step on the bit so the radii match.
04. Don't go too deep — every step bigger enlarges the cutout. The cover plate forgives 1/2" of slop on each side, but don't push it.

3 CUT & DEBURR

01. Cutoff wheel or air saw — connect the drilled holes with straight cuts along the Sharpie lines.
02. Drop the rectangular slug out of the tunnel.
03. File or sand EVERY edge until smooth. No burrs.
04. Wipe clean before next phase.

PRO TIP ***Step-bit corners.*** *The step bit IS the corner radius — pick the diameter you like (3/8" to 1/2" works), drill all four corners to that same step. If a corner ends up oversized, don't sweat it: the 5" × 4 1/2" cover plate has 1/2" of overlap on every side and hides minor mismatches. The cover plate has 4 screw holes — one per corner.*

4 CLUTCH TUBE INSPECTION

01. Reach into the tunnel and locate the clutch-cable tube and its bracket.
02. If the tube is loose in the bracket: reposition until snug.
03. TACK weld first — verify nothing moved.
04. Finish weld in SHORT, LOW-HEAT passes. The clutch tube is thin-wall — burn through = new cable run.

5 MARK & SCREW

01. Center the inspection plate (5" × 4 1/2") over the cutout — 1/2" overlap on every side.
02. Sharpie all (4) screw holes onto the tunnel.
03. Drill motor + Phillips bit. Place screw, KEEP PRESSURE, drive in until seated.
04. Don't use an impact — the heads cam out and strip.
05. Snug only — these are sheet-metal screws, not structural fasteners.

PRO TIP ***Print the template (page 3) at ACTUAL SIZE / 100%.*** *The cut template is drawn to scale. Verify the 1" reference square measures exactly 1.000" before marking the tunnel — if not, REPRINT. "Fit to Page" / "Scale to Fit" will undersize the cutout and the plate won't sit flush.*

6 PRIME & FINAL

01. Back screws out and remove the plate.
02. Prime ALL exposed tunnel edges (cut metal rusts fast).
03. Prime the back side of the inspection plate.
04. Allow primer to dry per can instructions.
05. Reinstall plate with the supplied screws — same pressure rule (no impact, drill motor only).
06. Reinstall carpet if applicable. Verify plate sits FLUSH with the tunnel.

FULL INSTALL GUIDE

VIDEOS · PHOTOS · TEMPLATE · TROUBLESHOOTING

Scan the QR code or visit:

airkewld.com/how-to-chassis-inspection-plate

Stuck? Text 1-623-518-3537 or email help@airkewld.com — we answer.

CUT TEMPLATE — ACTUAL SIZE

PRINT AT 100% · DO NOT FIT TO PAGE · VERIFY THE 1" SCALE BELOW

1.000" SQUARE

Verify before marking

6-INCH SCALE BAR

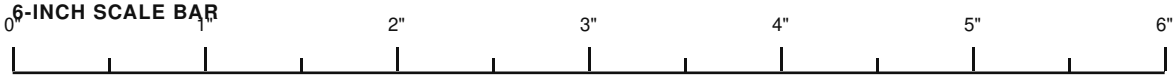

If markings don't measure exactly, reprint at 100%.

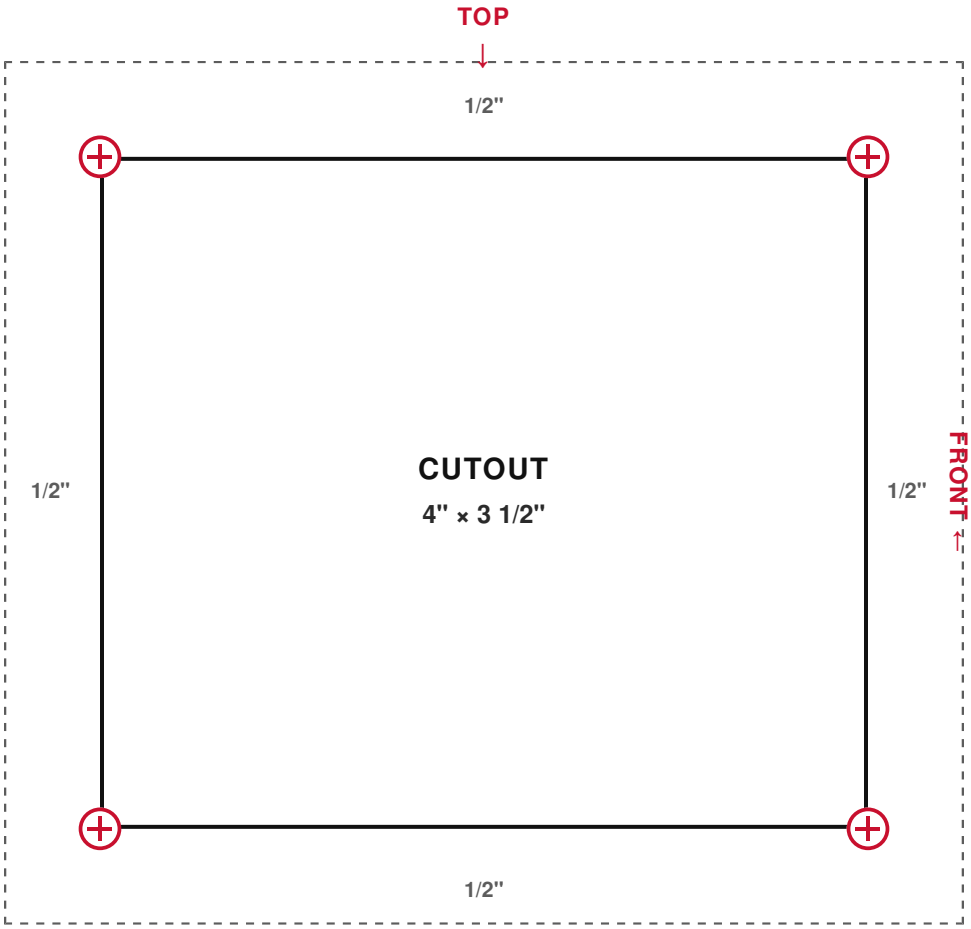

Cover plate (5" × 4 1/2") shown DASHED · 1/2" overlap each side

REFERENCE FROM CHASSIS

- Bottom edge of CUTOUT = 1/2" up from the floor pan
- Top edge of CUTOUT = 4" up from the floor pan (cutout = 3 1/2" tall)
- Front edge of CUTOUT = 1 1/2" back from the firewall
- Rear edge of CUTOUT = 5 1/2" back from the firewall (cutout = 4" wide)

CUT ORDER

1. Center-punch all four corners (red crosshairs above).
2. Step-drill each corner — one step short of the radius shown.
3. Cut straight lines connecting the drilled holes.
4. File or sand all edges smooth.

VERIFY SCALE FIRST

Measure the 1" square at the top of this page. If it isn't EXACTLY 1.000", REPRINT at 100% / Actual Size. Fit-to-Page will undersize the cutout.